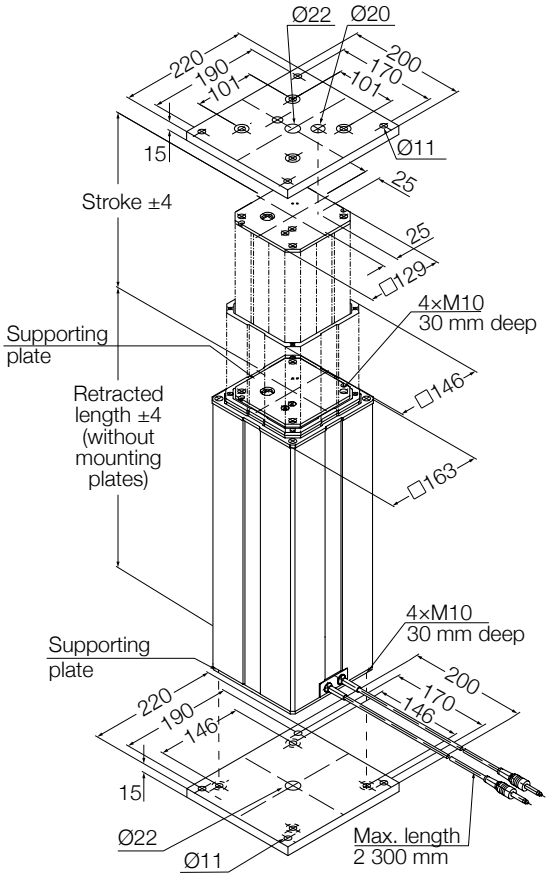TLT - Dimensional drawing